Coupling-/Decoupling Network
CDN 504/ 508 symmetrical

- **Rated voltage 80V=**
- **Surge: 5.0 kV, 1.2/50 µs**
- **Surge: 5.0 kV, 10/700 µs**
- **Coupling Impedance, selectable**

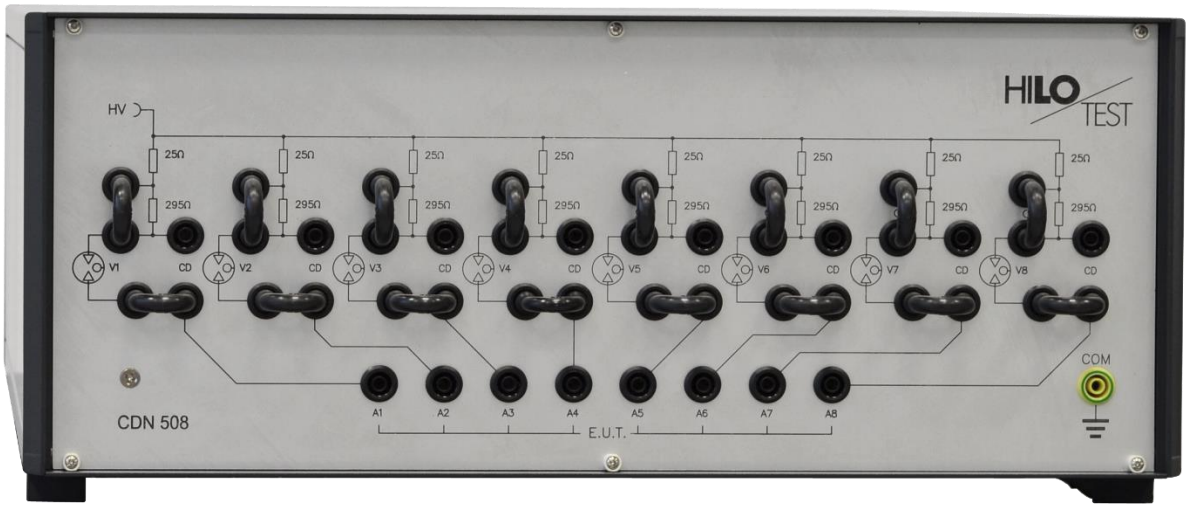

According to
IEC 61000-4-5

Designed for applying the impulse output voltage of the Combination Wave Generator to interconnection lines of the equipment under test, acc. to IEC 61000-4-5, Fig10.

The coupling/decoupling network CDN 504 /508 essentially consists of a current compensated decoupling inductor, L1 – L4/L8, and a set of coupling impedances to be inserted in the coupling path.

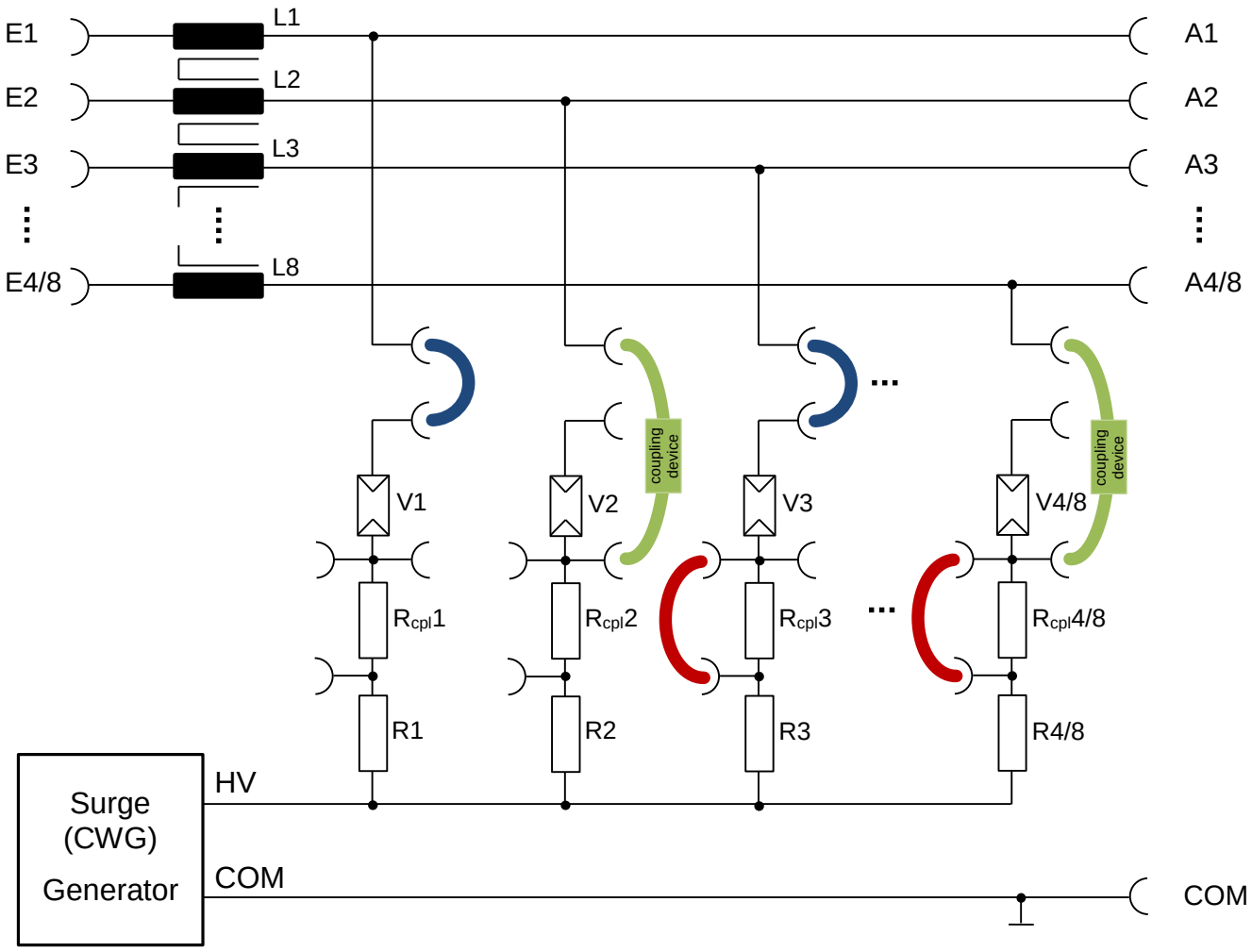

Technical specification:	CDN 504		CDN 508
Rated voltage	80 V=		
Rated current	1A		
Max. test voltage	5.0 kV,1.2/50µs,10/700 µs		
Max. test current	2,5 kA, 8/20µs		
Coupling Impedance, selectable:	R1 – R4	25Ω	R1 – R8
	$R_{cpl}1$ - $R_{cpl}4$	135Ω / 295Ω	$R_{cpl}1$ - $R_{cpl}8$
	V1 – V4	over-voltage prot. 90V	V1 – V8
Decoupling inductors, current compensated	L1 – L4	20 mH, pair	L1 – L8
Dimensions: 19"-cabinet W * H * D	450*180*360mm³		
Weight	9.5 kg		

Accessories	CDN 508
1 HV-IN connecting cable with 4 mm∅ connectors, 1 GND-connecting cable, yellow/green, connecting plugs 19 mm, connecting plugs 38 mm.	